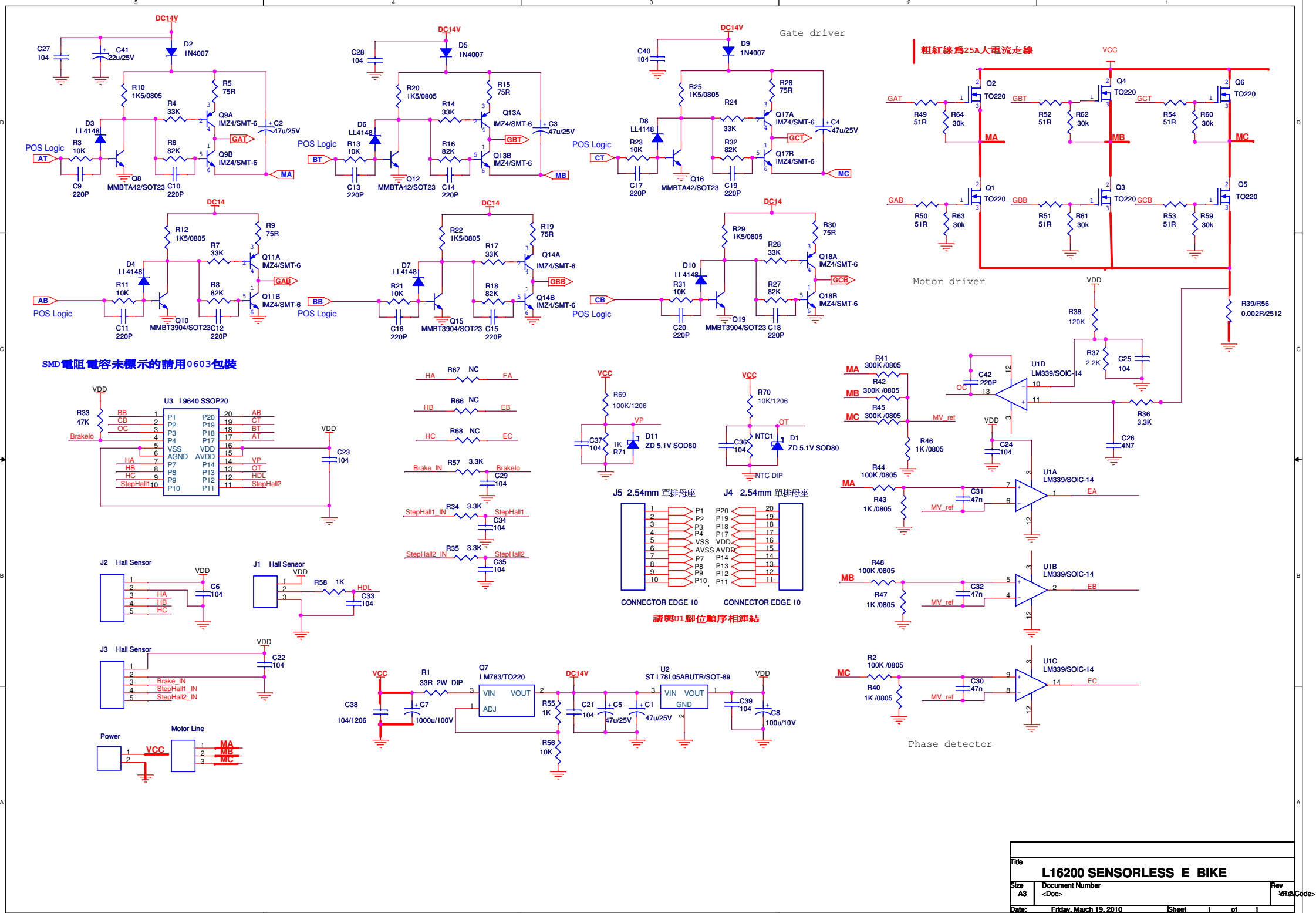
Gate driver
粗紅線爲25A大電流走線
Motor driver
Phase detector
SMD電阻電容未標示的請用0603包裝
請與U1腳位順序相連結
POS Logic
U3 L9640 SSOP20
J2 Hall Sensor
J1 Hall Sensor
J3 Hall Sensor
J5 2.54mm 單排母座
J4 2.54mm 單排母座
CONNECTOR EDGE 10
Power
Motor Line
Q7 LM783/TO220
U2 ST L78L05ABUTR/SOT-89
U1A LM339/SOIC-14
U1B LM339/SOIC-14
U1C LM339/SOIC-14
U1D LM339/SOIC-14
L16200 SENSORLESS E BIKE
Friday, March 19, 2010